Electrolux PROFESSIONAL

Modular Cooking Range Line
700XP 4-Hot Square Plates
Electric Boiling Top Range

Southern Contracts
Efficient • Reliable • Proud

371017 (E7ECEH4Q00)	4-Hot Square Plate (2,6 kW each) electric Boiling Top
371130 (E7ECEH4Q0N)	4-Hot Square Plate (2,6 kW each) electric Boiling Top

Short Form Specification

Item No.

To be installed on open base installations, bridging supports or cantilever systems. Four 2.6 kW square cast-iron hot plates hermetically sealed to the one-piece top. Exterior panels in stainless steel with Scotch Brite finish. One piece pressed work top in 1.5 mm thick stainless steel. Right-angled side edges to allow flush-fitting junction between units.

APPROVAL:

Main Features

- Unit to be mounted on open base cupboards, bridging supports or cantilever systems.
- The four 2.6kW cast-iron square plates are hermtically sealed to the one-piece top.
- The special design of the control knob system guarantees against water infiltration.
- IPx4 water protection.
- Suitable for countertop installation.

Construction

- All exterior panels in Stainless Steel with Scotch Brite finishing.
- One piece pressed 1.5 mm work top in Stainless steel.
- Model has right-angled side edges to allow flush fitting joints between units, eliminating gaps and possible dirt traps.

Optional Accessories

• Junction sealing kit	PNC 206086 ❑
• Support for bridge type installation, 800mm	PNC 206137 ❑
• Support for bridge type installation, 1000mm	PNC 206138 ❑
• Support for bridge type installation, 1200mm	PNC 206139 ❑
• Support for bridge type installation, 1400mm	PNC 206140 ❑
• Support for bridge type installation, 1600mm	PNC 206141 ❑
• 2 cast iron plate bars for electric cooking top	PNC 206168 ❑
• Water column with swivel arm (water column extension not included)	PNC 206289 ❑
• Water column extension for 700 line	PNC 206291 ❑
• Chimney upstand, 800mm	PNC 206304 ❑
• Right and left side handrails	PNC 206307 ❑
• Back handrail 800 mm	PNC 206308 ❑
• Chimney grid net, 400mm (700XP/900)	PNC 206400 ❑
• Frontal handrail, 800mm	PNC 216047 ❑
• Frontal handrail, 1200mm	PNC 216049 ❑
• Frontal handrail, 1600mm	PNC 216050 ❑
• Large handrail - portioning shelf, 800mm	PNC 216186 ❑
• 2 side covering panels for top appliances	PNC 216277 ❑

Electrolux PROFESSIONAL
Modular Cooking Range Line
700XP 4-Hot Square Plates Electric Boiling Top Range

Modular Cooking Range Line
700XP 4-Hot Square Plates Electric Boiling Top Range

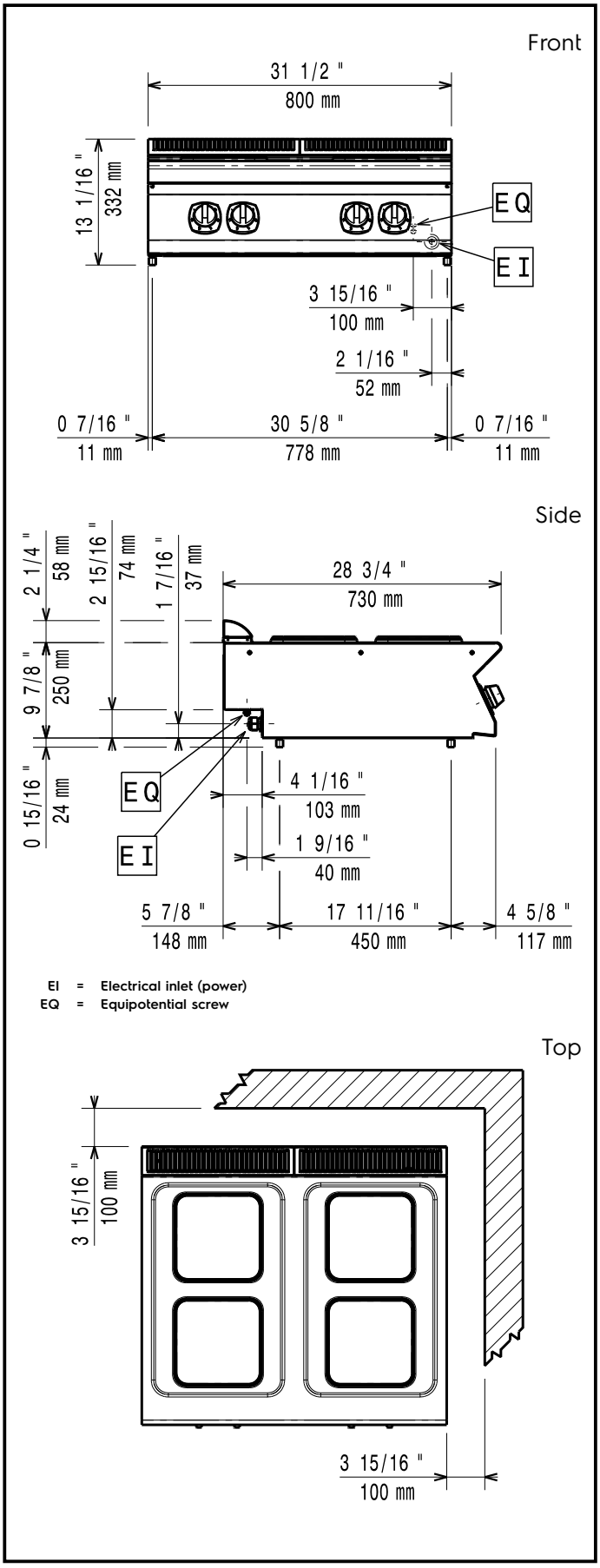

Electric

Supply voltage:	
371017 (E7ECEH4Q00)	380-400 V/3 ph/50/60 Hz
371130 (E7ECEH4Q0N)	230 V/3 ph/50/60 Hz
Total Watts:	10.4 kW
Predisposed for:	
371017 (E7ECEH4Q00)	380-400V 3~ 50/60Hz 9-10,4kW

Key Information:

Front Plates Power:	2.6 - 2.6 kW
Back Plates Power:	2.6 - 2.6 kW
Front Plates dimensions:	230x230 230x230
Back Plates dimensions:	230x230 230x230
External dimensions, Width:	800 mm
External dimensions, Depth:	730 mm
External dimensions, Height:	250 mm
Net weight:	40 kg
Shipping weight:	
371017 (E7ECEH4Q00)	48 kg
371130 (E7ECEH4Q0N)	47 kg
Shipping height:	
371017 (E7ECEH4Q00)	520 mm
371130 (E7ECEH4Q0N)	540 mm
Shipping width:	820 mm
Shipping depth:	860 mm
Shipping volume:	
371017 (E7ECEH4Q00)	0.37 m³
371130 (E7ECEH4Q0N)	0.38 m³

If appliance is set up or next to or against temperature sensitive furniture or similar, a safety gap of approximately 150 mm should be maintained or some form of heat insulation fitted.

Certification group:	
371017 (E7ECEH4Q00)	EH74T
371130 (E7ECEH4Q0N)	N7CE1

The company reserves the right to make modifications to the products without prior notice. All information correct at time of printing.

2022.04.20