Electrolux PROFESSIONAL

Service Trolleys
Plate and Rack Trolley

Southern Contracts
Efficient • Reliable • Proud

361296 (MDNT4B3S) Plate and Basket (500x500mm) Trolley

Short Form Specification

Item No.

Constructed in 304 AISI stainless steel. Framework in mm25 tubing, completely welded. Seamless base, upper and back shelves with upturned edges, welded to the framework. One side has three inclined shelves to accommodate stacked plates; the other side has L-shaped runners to accommodate n. 4 dishwashing baskets mm500x500.The handles are an extension of the load-bearing frame. N. 4 swivelling castors, two with brakes, mm125 in diameter, fitted with plastic bumpers.

Main Features

- Framework in 25 mm tubing, completely welded.
- Equipped with L-shaped runners.
- Seamless base, upper and back shelves with upturn edges welded to the framework.
- Accomodates 4 dishwashing baskets 500x500 mm.
- One side to have three inclined shelves to accomodate stacked plates.
- 4 pivoting Ø 125 mm wheels, 2 of which with brakes, fitted with plastic bumpers

Construction

- Constructed entirely in 304 AISI stainless steel.

APPROVAL:

Electrolux PROFESSIONAL
Service Trolleys
Plate and Rack Trolley

Service Trolleys
Plate and Rack Trolley

Front

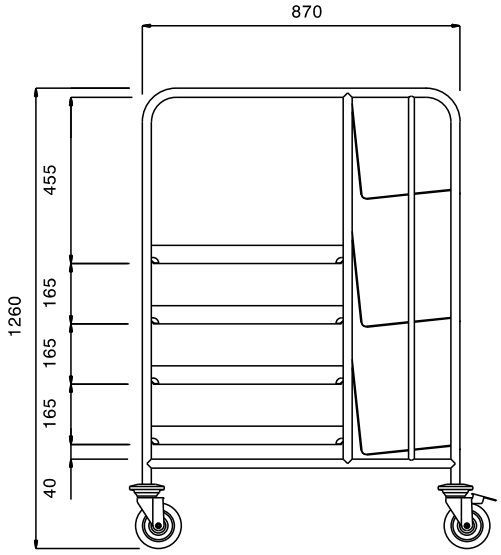

Side

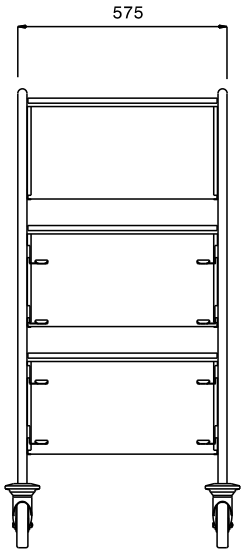

Top

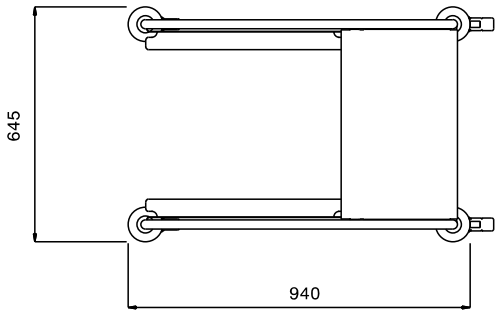

Key Information:

External dimensions, Width:	
361296 (MDNT4B3S)	645 mm
External dimensions, Depth:	940 mm
External dimensions, Height:	1260 mm
Wheel material:	Zinc plated
Wheel diameter:	Ø 125
Net weight:	22 kg

The company reserves the right to make modifications to the products without prior notice. All information correct at time of printing.

2022.05.04